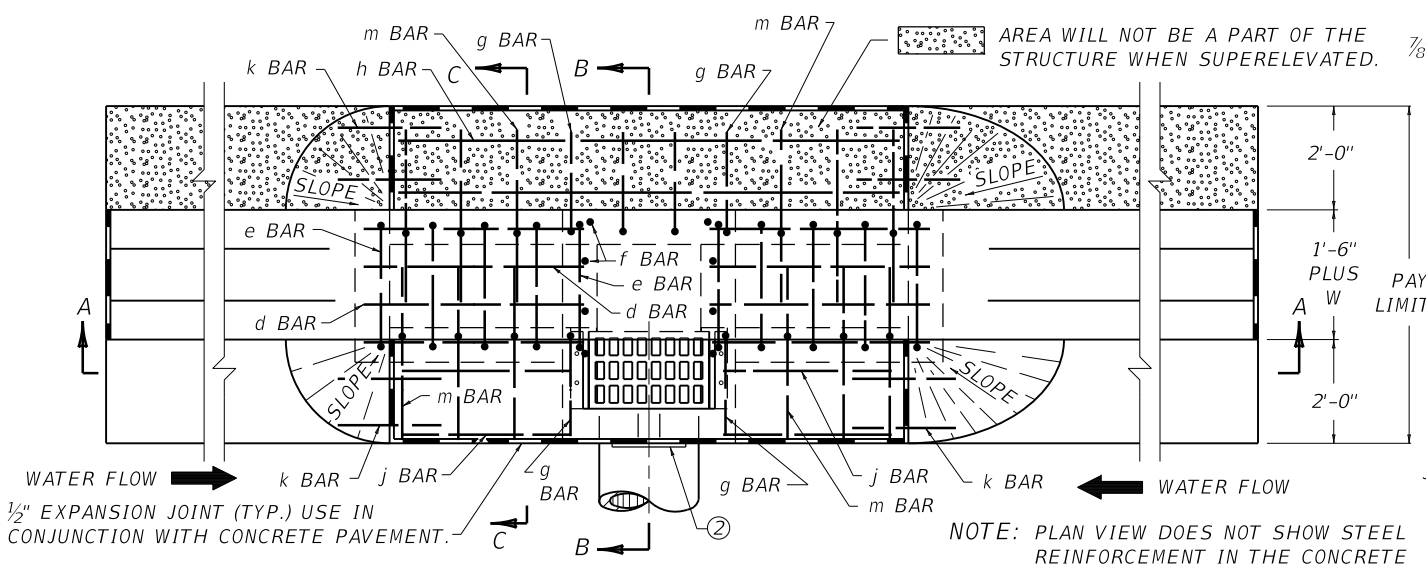

PLAN VIEW (BOX INLET TYPE A)

NOTE: PLAN VIEW DOES NOT SHOW STEEL REINFORCEMENT IN THE CONCRETE MEDIAN BARRIER.

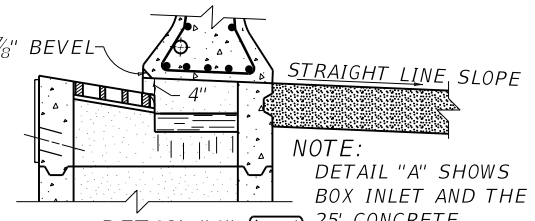

DETAIL "A"

NOTE: DETAIL "A" SHOWS BOX INLET AND THE 25' CONCRETE MEDIAN BARRIER IN SUPERELEVATION.

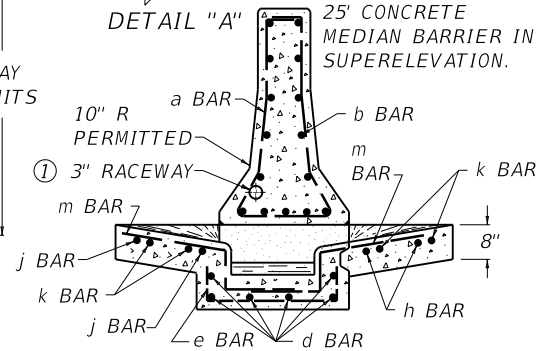

SECTION C-C

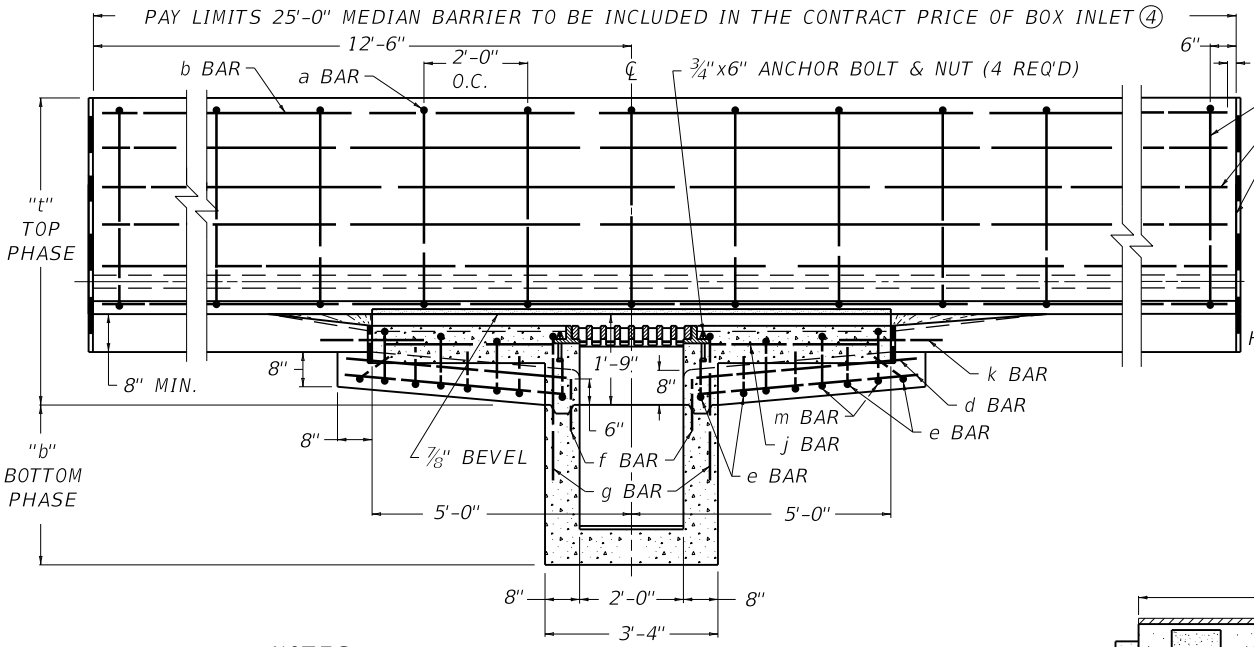

SECTION A-A

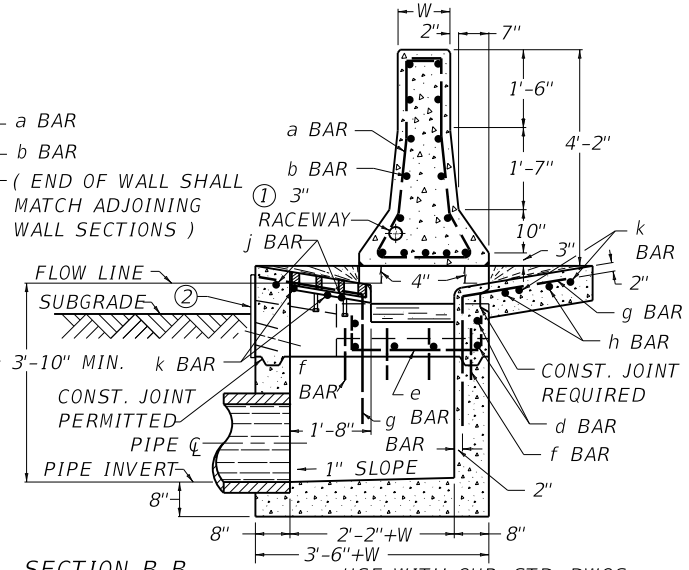

SECTION B-B

USE WITH CUR. STD. DWGS.
RBM-050 RBM-053 RDB-241

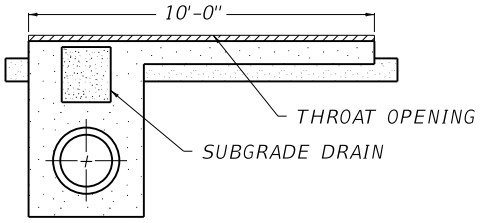

BOX INLET TYPE B

~ NOTES ~

① SEE PLANS FOR SIZE, LOCATION AND PAYMENT FOR RACEWAY WHEN REQUIRED.
② FABRIC WRAPPED BACKFILL DRAIN, (ONE PER WEEP HOLE) .
3. ALL WALLS AND SLABS ARE 8" THICK UNLESS OTHERWISE SHOWN.
④ MEDIAN BARRIER WALL MAY BE CAST-IN-PLACE, FIXED OR SLIP-FORMED, CONTRACTOR'S OPTION.
5. WALL REINFORCEMENT IS DETAILED FOR CAST-IN-PLACE WALLS. FOR SLIP-FORMED WALLS SEE CURRENT STANDARD DRAWING RDB-241 FOR STEEL DETAIL.

KENTUCKY
DEPARTMENT OF HIGHWAYS

CONCRETE MEDIAN BARRIER BOX INLET (50" TALL WALL CAST-IN-PLACE)

STANDARD DRAWING NO. RDB-240-02

SUBMITTED William E. Ginkel — DIRECTOR DIVISION OF DESIGN — 12-01-15 DATE

APPROVED — STATE HIGHWAY ENGINEER — 12-01-15 DATE